1. APPLICATION

HERCULES TYPE D, HLD bearings have been developed to fulfill the need for a low friction bearing on corbels and columns, where a continuous slip joint is inappropriate. They can be used under beams and slabs and also under pipes, ducts, conveyors, pressure vessels and small span bridges.

2. MATERIAL

HLD bearings consist of a mild steel top plate to which a polished stainless steel facing plate is riveted. This plate slides against PTFE coated pad of reinforced rubber which in turn is bonded to a mild steel base plate (optional for HLD/FF)

3. DESIGN LIMITATIONS

The following design limitations are recommended:

3.1	Coefficient of friction	0.05	
3.2	Expansion capacity		Up to ±30mm for (HLD/FF) and ±40mm for (HLD/SG). Non-standard bearings can be supplied to accommodate larger expansions
3.3	Maximum contact stress	10 MPa	
3.4	Maximum rotation		Standard bearings up to 0.021 radians
3.5	Maximum temperature	80ºC	Higher temperatures can be accommodated by thermally insulating the bearings.

4. SIZES AVAILABLE

4.1 Free Float Bearing (HLD/FF)

Table 4.1 lists a range of standard sizes available. These can be supplied with or without base plate depending on the installation. Top slide plates have been designed to accommodate movement up to ±30mm in the principal direction of movement and ±7.5mm in transverse direction. Two grouting-in bolts are normally supplied with their centre line parallel to the pad's major axis.

4.2 Part Number

The part numbers is made up of groups of letters and numbers as follows:

HLD	/	175	/	A	/	E	/	G
Hercules Type D		Capacity in Kn		Expansion Capacity		Rotational Capacity		Base Plate

4.3 Sliding Guided and Fixed Bearings (HLD/SG and HLD/FX)

Table 4.2 – 4.6 list a range of standard sized available for steel and concrete connections. These bearings are designed to be removable and to accept lateral load of 30% of the vertical rated load. Other bearings having larger capacities than those listed, can be designed by our Technical Department. End stops, wiper seals and uplift constraints can also be incorporated.

TABLE 4.1 - STANDARD HERCULES TYPE D (FREE FLOAT) BEARING RANGE

Part Number	Max. Vertical Working Load (kN)	Top Plate Dimensions (mm) for the following expansions (mm) (C±×D×Z2)			Pad Dimensions (mm) for the following rotations (rads) (We×Le×te)			Base Plate Dimensions (mm) (A×B×Z9)
		A(±10)	B(±20)	C(±30)	D(0.010)	E(0.015)	F(0.021)	
HLD/FF 75	75	95×125×16	115×125×16	135×125×16	70×110×6	70×110×12	70×110×16	85×125×16
HLD/FF 100	100	100×150×16	120×150×16	140×150×16	75×135×6	75×135×12	75×135×16	90×150×16
HLD/FF 125	125	110×165×16	130×165×16	150×165×16	85×150×10	85×150×12	85×150×16	100×165×16
HLD/FF 150	150	125×165×16	145×165×16	165×165×16	100×150×10	100×150×12	100×150×20	115×165×16
HLD/FF 175	175	135×175×16	155×175×16	175×175×16	110×160×10	110×160×16	110×160×20	125×175×16
HLD/FF 200	200	150×175×16	170×175×16	190×175×16	125×160×10	125×160×16	125×160×20	140×175×16
HLD/FF 225	225	150×195×16	170×195×16	190×195×16	125×180×10	125×180×16	125×180×25	140×195×16
HLD/FF 250	250	160×205×16	180×205×16	200×205×16	135×190×10	135×190×16	135×190×25	150×205×16
HLD/FF 275	275	165×215×16	185×215×16	205×215×16	140×200×12	140×200×20	140×200×25	155×215×16
HLD/FF 300	300	165×230×16	185×230×16	205×230×16	140×215×12	140×215×20	140×215×25	155×230×16
HLD/FF 325	325	170×240×16	190×240×16	210×240×16	145×225×12	145×225×20	145×225×30	160×240×16
HLD/FF 350	350	175×250×16	195×250×16	215×250×16	150×235×12	150×235×20	150×235×30	165×250×16
HLD/FF 375	375	185×255×16	205×255×16	225×255×16	160×240×12	160×240×20	160×240×30	175×255×16
HLD/FF 400	400	185×265×16	205×265×16	225×265×16	160×250×12	160×250×20	160×250×30	175×265×16
HLD/FF 425	425	190×275×16	210×275×16	230×275×16	165×260×16	165×260×20	165×260×30	180×275×16
HLD/FF 450	450	195×285×16	215×285×16	235×285×16	170×270×16	170×270×20	170×270×35	185×285×16
HLD/FF 475	475	200×295×16	220×295×16	240×295×16	175×280×16	175×280×25	175×280×35	190×295×16
HLD/FF 500	500	200×305×16	220×305×16	240×305×16	175×290×16	175×290×25	175×290×35	190×305×16
HLD/FF 525	525	205×310×16	225×310×16	245×310×16	180×295×16	180×295×25	180×295×35	195×310×16
HLD/FF 550	550	215×310×16	235×310×16	255×310×16	190×295×16	190×295×25	190×295×35	205×310×16
HLD/FF 575	575	220×315×16	240×315×16	260×315×16	195×300×16	195×300×25	195×300×35	210×315×16
HLD/FF 600	600	230×315×16	250×315×16	270×315×16	205×300×16	205×300×25	205×300×40	220×315×16

MATERIAL SPECIFICATION

1	Grouting-in bolts	M16×100 steel to Australian Standard 1111
2	Top plate	Steel to Australian Standard 3678:250
3	Facing plate	Stainless steel to British Standard 1449:Gr 316
4	Slide Face	PTFE to Australian Standard 1195:Gr B (Hercuflon)
5	Pad	Reinforced rubber (Hercupad)
6	Base plate	Steel to Australian Standard 3678:250

SURFACE FINISH

Corrosion protection Steel grit blasted to Australian Standard 1672. Part 4 Class3 and sprayed 75 µm zinc-silicate primer.
Top coat to client's specification

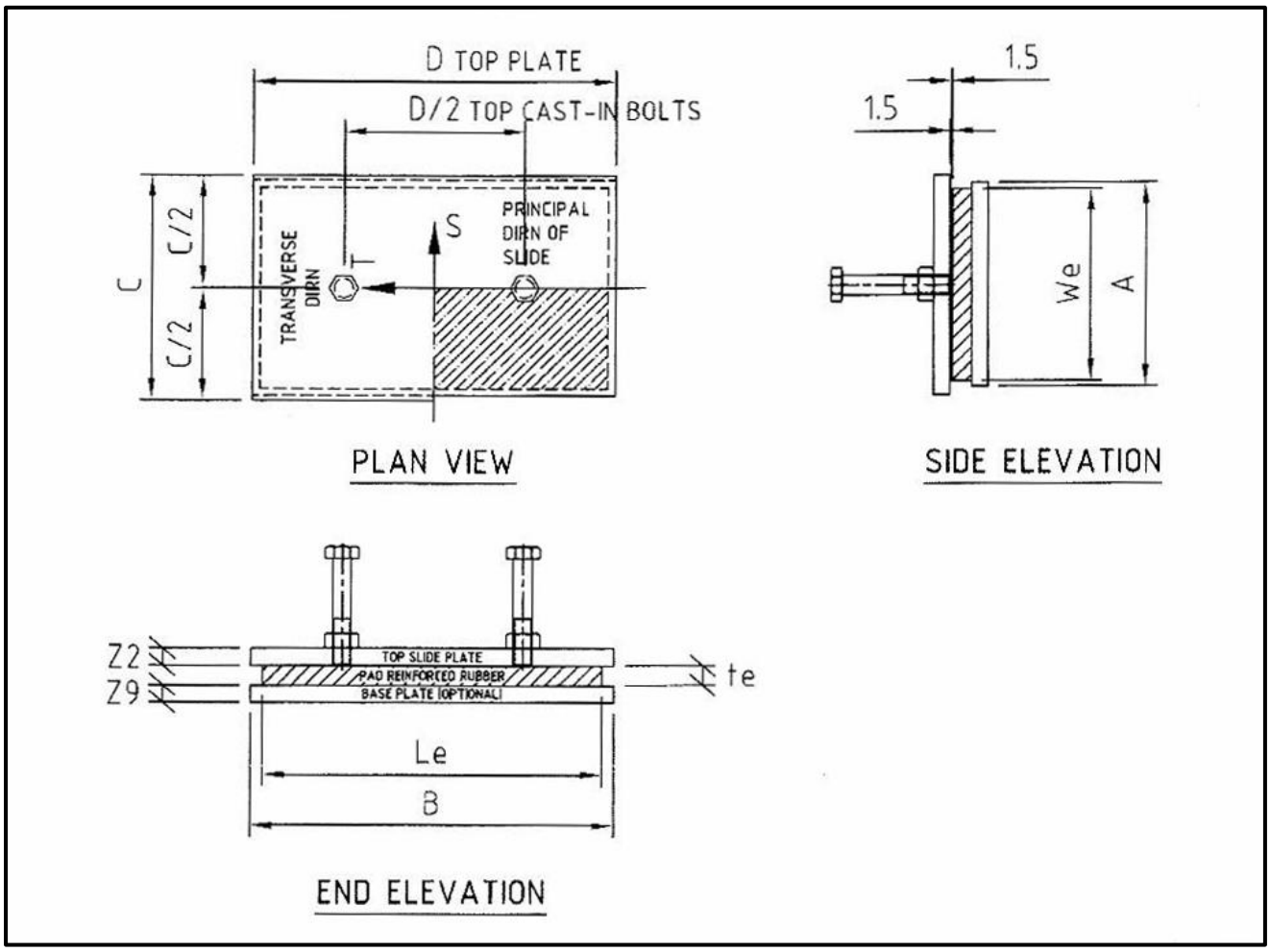

5. INSTALLATION METHOD STATEMENT (IN CONCRETE STRUCTURES)

5.1 The diagram on page 4-4 shows a HLD Bearing being cast into an in-situ roof slab. Before leaving the factory the bearing pad is blocked in with polystyrene strips and the whole bearing assembly is sealed with paper tape. This tape excludes dirt and dust from the Poly Tetra Fluoro Ethylene (PTFE) face and should not be removed. Grouting-in bolts are provided to screw into the tapped holes provided in the top plate.

5.2 Prepare concrete seating with a wood float finish so that the level does not vary more than 2mm from a straight edge placed in any direction across the seating. The horizontal plane of the seating should vary no more than 3mm from the elevations shown on the plans.

5.3 Place the bearing in the position shown on the plans and cut any strips of expanded polystyrene required for blocking out around the bearing. Remove the bearing and the loose styrene strips and brush off any dust or grit. Apply Hercules adhesive, type HBA, and bond into position. In some cases it may be better to use Hercules Epoxy Grout, especially if the seating is rough.

5.4 Cover the joints between the bearing and polystyrene strips with polythene sheet or masking tape to prevent ingress of concrete during the pour.

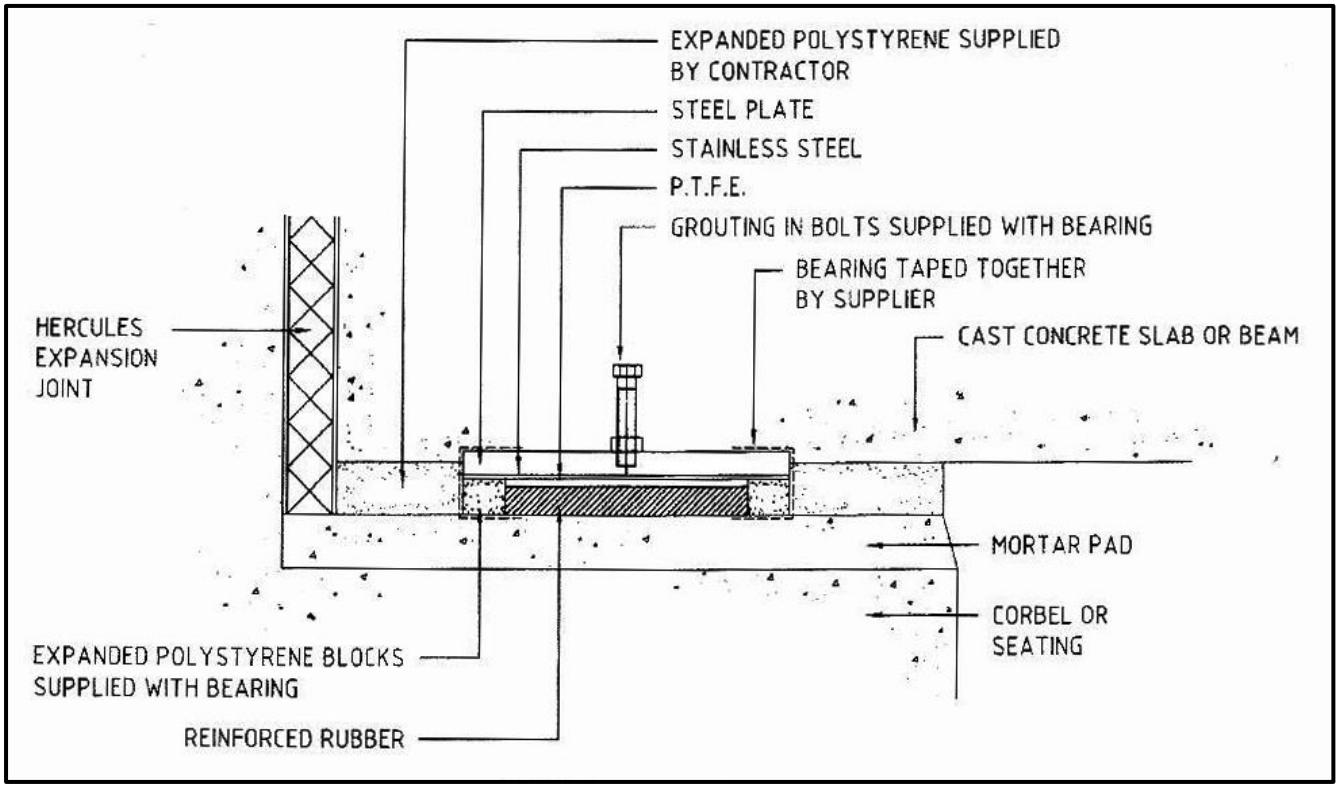

6. INSTALLATION METHOD STATEMENT (IN STEEL STRUCTURES)

6.1 The diagram on page 4 - 5 gives examples of actual HERCULES bearing designs. Bolted or dowelled connections are preferable to welded ones because of the possible damage to the epoxy bonds used on HERCULES bearings. If welded connections are unavoidable then the top plate and base plate should be thicker than normal and tack welding only should be employed.

6.2 Fabricated steel structures are sure to be distorted and should be checked for flatness at the bearing seat. A straight edge placed from corner to corner across the seating should show no more than 0.25mm gap along its length. If this exceeds, the seats may require machining or the bearings may choke up. Alternatively, the gap can be filled with Hercules Epoxy Grout.

6.3 Make sure that the top plate is positioned in such a way that it covers the PTFE pad at all conditions of expansion. On no account should the top plate be allowed to uncover the PTFE in service as this will cause major damage. Base plates should be placed so that the PTFE and stainless steel faces come together as evenly as possible. Pad thickness is normally chosen to accommodate a certain amount of rotation due to the fabrication and constructional tolerances but excessive misalignments should be investigated at an early stage in erection.

6.4 Bearings are usually supplied with the top plate and lower pad taped together to protect the PTFE in transit. It may be necessary to remove this tape during installation, in which case, make sure the PTFE and stainless steel surfaces are kept scrupulously clean.

6.5 Some bearing assemblies are supplied with steel straps holding the top and base plates together. This is done to protect the bearing faces during transit and erection and/or provide a particular offset between the two plates. Make sure that offset bearings are installed as shown on the plans and remember to remove the straps after installation.

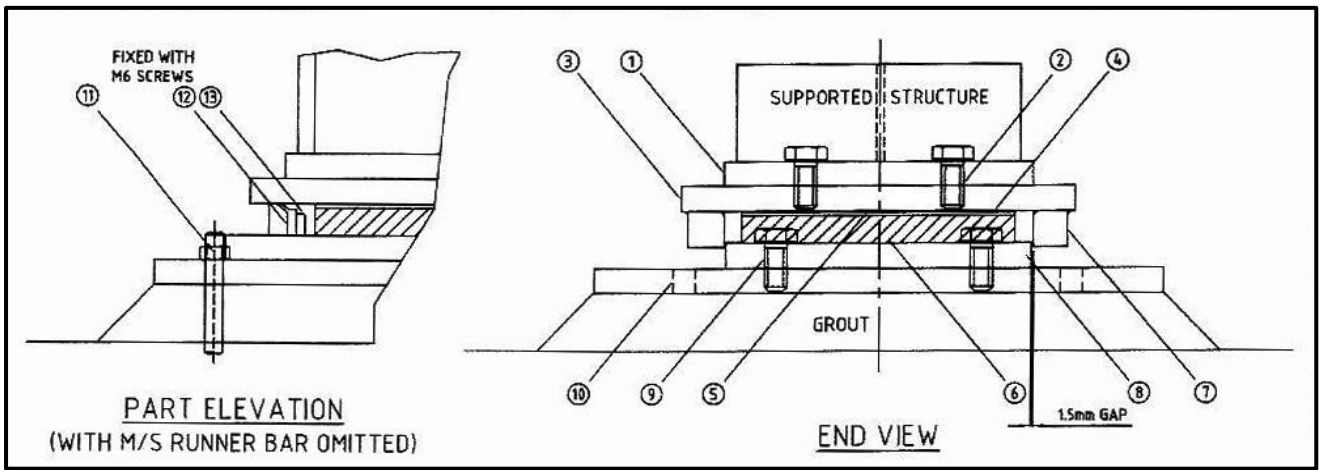

HERCULES TYPE D GUIDED EXPANSION BEARING WITH UPLIFT CONSTRAINT

Hercules Type D Guided Expansion Ref HLD/S 350

Finish — All steel surfaces to be blasted to AS 1672, Part 4, Class 3 and spray with 75 µm zinc-in-silicate

Project — Roof truss Bearing for Wrest Point Convention Centre.

Drawing No. — H/2193

Design Parameters

Maximum Vertical Load	350 kN
Maximum Lateral Load	35 kN
Maximum Rotation	0.0041 rad
Maximum Expansion	± 18mm
Coeff of Friction	0.05
Slide Face Stress	9.7 MPa

Item	Description	Dimensions	Material	No. off
13	Seal Support	12×10×200	As 1204 : 250	2
12	Seal Assembly	210 Lg	Polyurethane	2
11	Lower Grout Bolts with Washer Nut	M20×550 100×CDC	AS 1204 : 250	4
10	Cast-in Plate	480×380×20	AS 1204 : 250	1
9	Base Plate Securing Bolt & Lock Washer	M16×35	AS 1111 ZN PL	4
8	Base plate	360×210×20	AS 1204 : 250	1
7	Runner Bar	32×32×260	AS 1204 : 250	2
6	Pad	200×180×20	'Viblon' Reinforced Neoprene	1
5	Slide Face	200×180×16	'Rulon' Glass filled PTFE	1
4	Facing Plate	280×210×16	AS 1449 304	1
3	Slide Plate	290×280×20	AS 1204 : 250	1
2	Upper Securing Bolt & Lock Washer	M16×40	AS 1111 ZW PL	4
1	Supported Structure		By contractor	1

HERCULES TYPE D GUIDED EXPANSION BEARING WITH UPLIFT CONSTRAINT

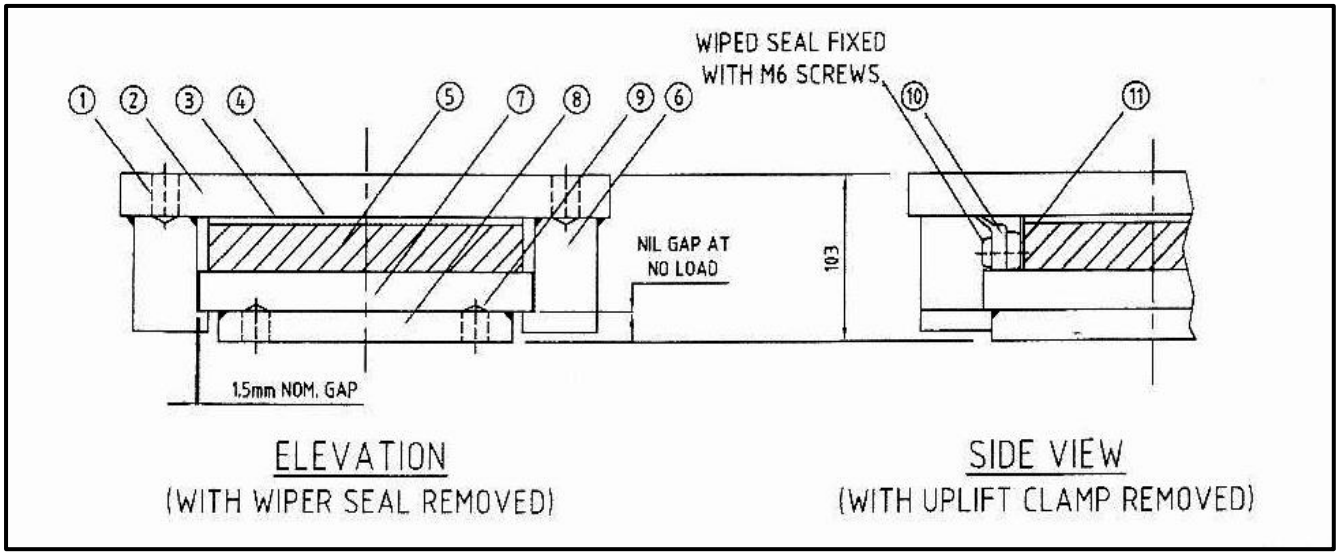

Finish	All exposed steel to be grit blasted to AS 1627, Part 4, Class 3 and sprayed with 75 um zinc-in-silicate primer	
Project	Howick Project	
Drawing No.	H/3502/1	
Design Parameters	Maximum Vertical WL	236 kN
	Maximum Lateral WL	69 kN
	Maximum Uplift WL	65 kN
	Maximum Expansion Capacity	±60mm
	Maximum Rotational Capacity	0.014 rads
	Coefficient of Friction	0.05

Item	Description	Dimensions	Material	No off
11	Wiper Support	20×6×220	As 1204 : 250	4
10	Wiper Seal	223 long	Polyurethane	2
9	Lower Securing Bolt & Lock Washer	M20×40	As 1252 M/S (Galv)	4
8	Spacer Plate	180×170×25	As 1204 : 250	1
7	Base plate	220×180×25	As 1204 : 250	1
6	Uplift Clamp Bar	60×70×290	As 1204 : 250	2
5	Pad	200×130×25	Reinforced Neoprene	1
4	Slide Plate	200×130×16	Glass Filled PTFE	1
3	Facing plate	210×300×25	As 1449 304	1
2	Slide Plate	340×300×25	As 1204 : 250	1
1	Upper Securing Bolt & Lock Washer	M20×40	As 1252 M/S (Galv.)	4

TABLE 4.2 - STANDARD HERCULES TYPE D GUIDED BEARING (FOR STEEL CONNECTIONS)

Part Number	Working Load		Top plate (±40mm) Expansion, mm	Pad Dimensions 0.02 rads, mm	Base Plate Dimensions, mm	Bearing Overall Dimensions, mm	Top and bottom Bolts		
	Vmax	Hmax					Size (Gr8.8)	Top	Bottom
HLD/SG 100	100	30	160×225	75×135	90×150	160×225×59	M16	40×100	40×100
HLD/SG 200	200	60	210×265	125×160	140×175	210×265×63	M16	90×125	90×125
HLD/SG 300	300	90	240×320	140×215	155×230	240×320×63	M16	105×180	105×180
HLD/SG 400	400	120	245×370	160×250	175×265	245×370×78	M20	115×205	115×205
HLD/SG 500	500	150	260×410	175×290	190×305	260×410×78	M20	130×245	130×245
HLD/SG 600	600	180	290×420	206×300	220×315	290×420×83	M20	160×255	160×255

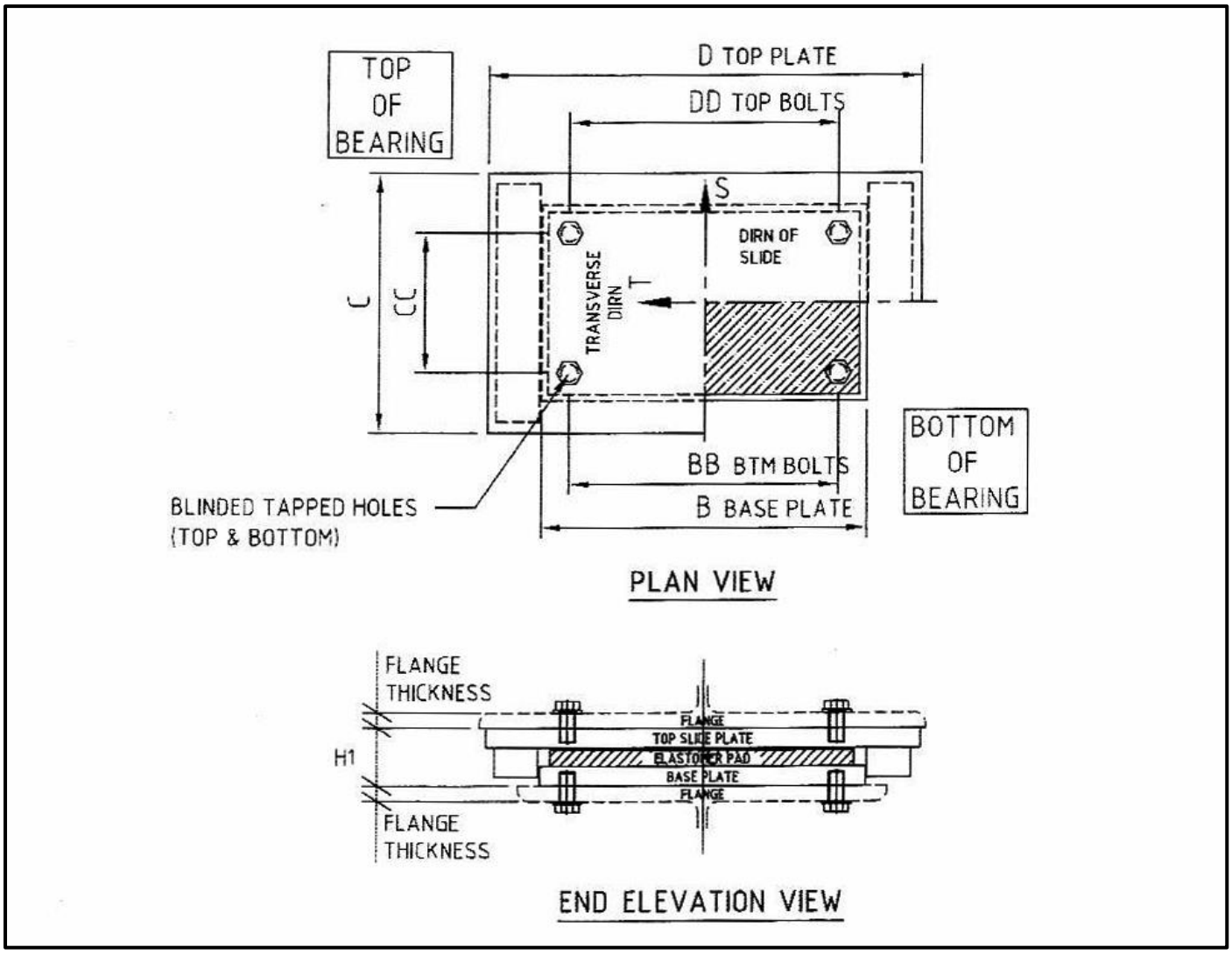

TABLE 4.3 - STANDARD HERCULES TYPE D FIXED BEARINGS (FOR STEEL STRUCTURES)

Part Number	Working Load		Top plate (±40mm) Expansion, mm	Pad Dimensions 0.02 rads, mm	Base Plate Dimensions, mm	Bearing Overall Dimensions, mm	Top and bottom Bolts		
	Vmax	Hmax					Size (Gr8.8)	Centres	
								Top	Bottom
HLD/FX 100	100	30	90×150	75×135	90×150	90×150×56	M16	40×100	40×100
HLD/ FX 200	200	50	140×175	125×160	140×175	140×175×60	M16	90×125	90×125
HLD/ FX 300	300	90	155×230	140×215	155×230	155×230×60	M16	105×180	105×180
HLD/ FX 400	400	120	175×265	160×250	175×265	175×265×75	M20	115×205	115×205
HLD/ FX 500	500	150	190×305	175×290	190×305	190×305×75	M20	130×245	130×245
HLD/ FX 600	600	180	220×315	206×300	220×315	220×315×80	M20	160×255	160×255

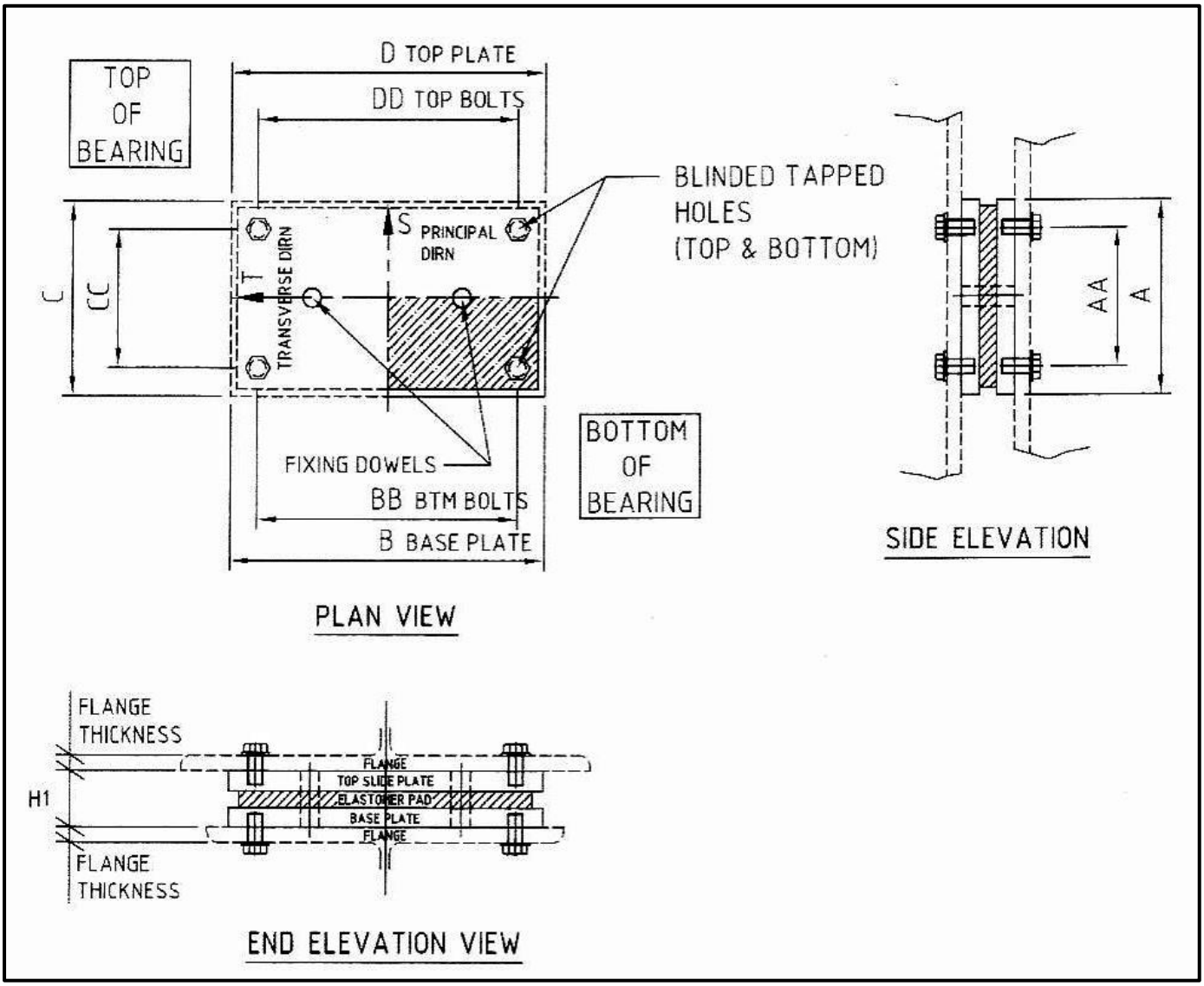

TABLE 4.4 STANDARD HERCULES TYPE D GUIDED BEARING (FOR CONCRETE STRUCTURES)

Part Number	Working Load		Top Attachment Plate (mm)	Top Plate (±40mm) Expansion (mm)	Pad Dimension 0.02 rads (mm)	Base Plate Dimensi on (mm)	Cast-in Plate Dimensions (mm)	Bearing Overall Dimensions (mm)
	Vmax	Hmax						
HLD/SG 100C	100	30	175×240×20	175×240	75×135	185×150	185×150×20	185×240×99
HLD/SG 200C	200	60	215×265×20	215×265	125×160	230×175	230×175×20	230×265×103
HLD/SG 300C	300	90	230×320×20	230×320	140×215	245×230	245×230×20	245×320×103
HLD/SG 400C	400	120	365×370×25	365×370	160×250	280×265	280×265×25	280×370×128
HLD/SG 500C	500	150	280×410×25	280×410	175×290	295×305	295×305×25	295×410×128
HLD/SG 600C	600	180	330×420×25	330×420	205×300	325×315	325×315×25	325×420×133

Part Number	Top & Bottom Attachment Bolts			Top & Bottom Cast-in Bolts		
	Size Grade 8.8	Centres		Size Grade 8.8 × Length	Centres	
		Top	Bottom		Top	Bottom
HLD/SG 100C	M16	125×190	135×100	M16×120	65×130	75×40
HLD/SG 200C	M16	165×215	180×125	M16×120	105×155	120×65
HLD/SG 300C	M16	180×270	195×180	M16×120	120×210	135×120
HLD/SG 400C	M20	205×310	220×205	M20×150	135×240	150×135
HLD/SG 500C	M20	220×350	235×245	M20×150	150×280	165×175
HLD/SG 600C	M20	270×360	265×255	M20×150	200×290	195×185

TABLE 4.5 - STANDARD HERCULES TYPE D FIXED BEARINGS (FOR CONCRETE STRUCTURES)

Part Number	Working Load		Top Attachment Plate (mm)	Top Plate (mm)	Pad Dimension 0.02 rads (mm)	Base Plate Dimension (mm)	Cast-in Plate Dimensions (mm)	Bearing Overall Dimensions (mm)
	Vmax	Hmax						
HLD/FX 100C	100	30	90×240×20	90×240	75×135	185×150	185×150×20	185×240×96
HLD/ FX 200C	200	60	140×265×20	140×265	125×160	230×175	230×175×20	230×265×100
HLD/ FX 300C	300	90	155×320×20	155×320	140×215	245×230	245×230×20	245×320×100
HLD/ FX 400C	400	120	175×370×25	175×370	160×250	280×265	280×265×25	280×370×125
HLD/ FX 500C	500	150	190×410×25	190×410	175×290	295×305	295×305×25	295×410×125
HLD/ FX 600C	600	180	220×420×25	220×420	205×300	325×315	325×315×25	325×420×130

Part Number	Top & Bottom Attachment Bolts			Top & Bottom Cast-in Bolts		
	Size Grade 8.8	Centres		Size Grade 8.8 × Length	Centres	
		Top	Bottom		Top	Bottom
HLD/FX 100C	M16	45×190	135×100	M16×120	40×60	70×40
HLD/ FX 200C	M16	90×215	180×125	M16×120	90×135	120×65
HLD/ FX 300C	M16	105×270	195×180	M16×120	105×160	135×120
HLD/ FX 400C	M20	115×310	220×205	M20×150	115×175	150×135
HLD/ FX 500C	M20	130×350	235×245	M20×150	130×195	165×175
HLD/ FX 600C	M20	160×360	265×255	M20×150	160×240	195×185

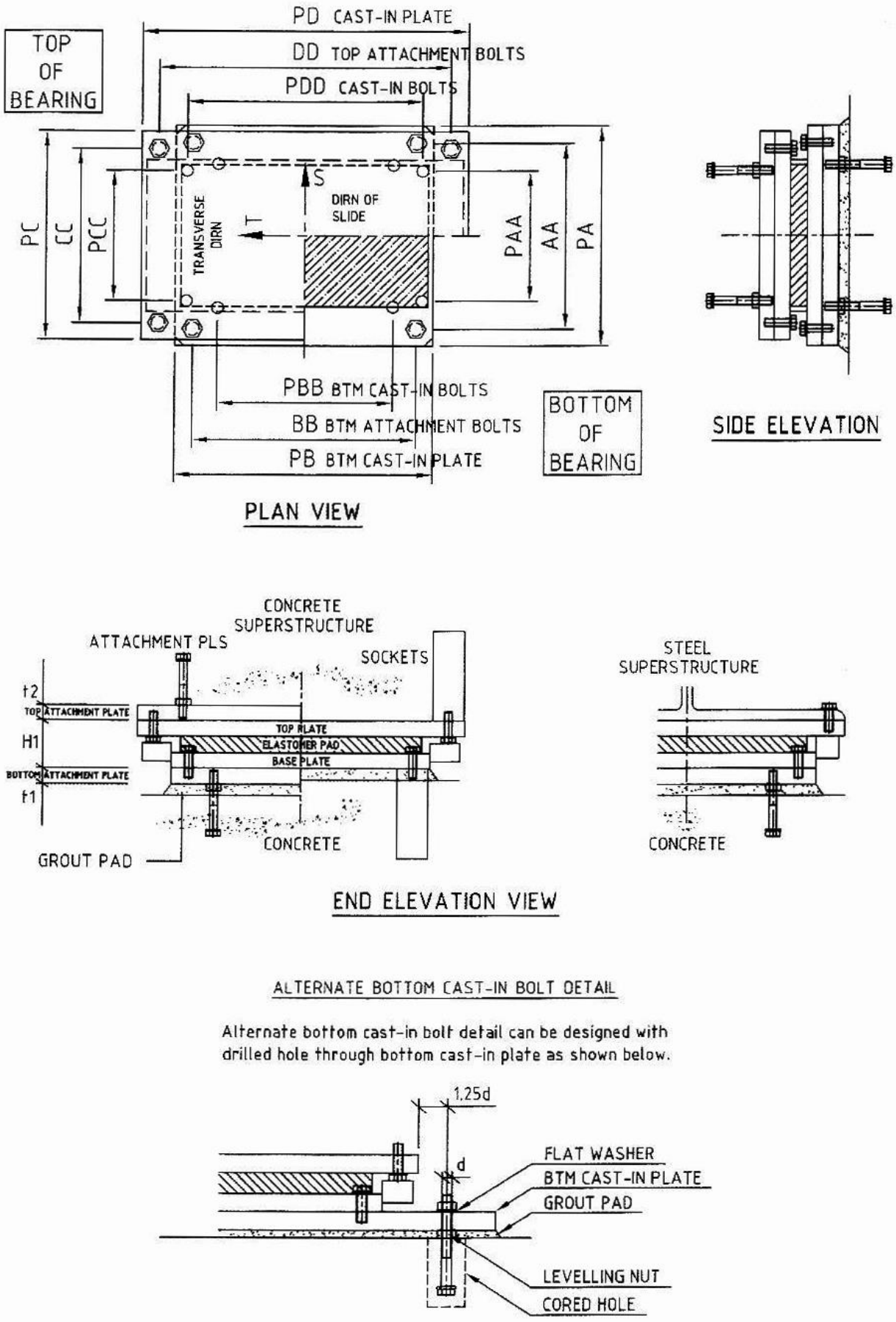

STANDARD HERCULES TYPE D DETAIL (FOR CONCRETE STRUCTURES)

TABLE 4.6 - WEIGHT OF STANDARD HERCULES TYPE D BEARINGS

Free Float Bearings HLD/F*	
Part Number	**Weight Range Wt(kg)**
HLD/FF 75	1.5 - 2.5
HLD/FF 100	2.0 - 3.0
HLD/FF 125	2.5 - 3.5
HLD/FF 150	3.0 - 4.0
HLD/FF 175	3.5 - 4.5
HLD/FF 200	3.5 - 5.0
HLD/FF 225	4.0 - 5.5
HLD/FF 250	4.5 - 6.0
HLD/FF 275	5.0 - 6.5
HLD/FF 300	5.5 - 7.0
HLD/FF 325	6.0 -7-5

Free Float Bearings HLD/F*	
Part Number	**Weight Range Wt(kg)**
HLD/FF 350	6.0 - 8.0
HLD/FF 375	6.5 - 8.5
HLD/FF 400	7.0 - 9.0
HLD/FF 425	7.5 - 9.5
HLD/FF 450	8.0 - 10.5
HLD/FF 475	8.5 - 11.0
HLD/FF 500	9.0 - 11.5
HLD/FF 525	9.0 - 12.0
HLD/FF 550	9.5 - 12.5
HLD/FF 575	10.0 - 13.0
HLD/FF 600	10.5 - 13.5

TABLE 4.7 - IN STEEL STRUCTURES

Sliding Guided Bearings HLD/SG *		Fixed Bearings HLD/FX*	
Part Number	**Weight Range Wt(kg)**	**Part Number**	**Weight Range Wt(kg)**
HLD/SG 100	11	HLD/FF ×100	5
HLD/SG 200	17	HLD/FF × 200	9
HLD/SG 300	23	HLD/FF × 300	13
HLD/SG 400	35	HLD/FF × 400	20
HLD/SG 500	41	HLD/FF × 500	25
HLD/SG 600	50	HLD/FF × 600	30

TABLE 4.8 - IN CONCRETE STRUCTURES

Sliding Guided Bearings HLD/SG * (C)					Fixed Bearings HLD/FX* (C)				
Part Number	**Brg Wt (kg)**	**Btn Att Pl Wt1 (kg)**	**Top Att Pl Wt2 (kg)**	**Total Wt (kg)**	**Part Number**	**Brg Wt (kg)**	**Btn Att Pl Wt1 (kg)**	**Top Att Pl Wt2 (kg)**	**Total Weight (kg)**
HLD/SG 100	14	5	10	29	HLD/FF ×100	9	5	5	19
HLD/SG 200	20	8	13	41	HLD/FF × 200	14	8	7	29
HLD/SG 300	26	10	16	52	HLD/FF × 300	18	10	9	37
HLD/SG 400	43	17	27	87	HLD/FF × 400	29	17	15	61
HLD/SG 500	50	20	31	101	HLD/FF × 500	35	20	17	72
HLD/SG 600	61	22	39	122	HLD/FF × 600	41	22	20	83

HERCULES TYPE D TANK TOP BEARINGS [HLD/TT]

1. APPLICATION

HERCULES TYPE D TANK TOP BEARINGS, HLD/TT have been developed to fulfill the need for an easily installed low friction bearing under roof beams of water tanks. They are particularly useful where loads are small and both lateral and uplift forces need to be accommodated. They can also be used in other light structures.

2. MATERIAL

HLD/TT consist of a thin stainless steel slide plate with two stainless steel studs flash welded to the upper face. The lower face is highly polished and the plate is provided with slotted holes for uplift through bolts. This plate slides against a PTFE coated pad of reinforced rubber which has two clearance holes drilled in it.

3. DESIGN LIMITATIONS

The following design limitations are recommended

3.1 Coefficient of friction	0.05
3.2 Expansion capacity	standard bearings up to ±20mm
3.3 Maximum rotation	standard bearings up to 0.01 radians
3.4 Maximum temperature	80ºC

4. SIZES AVAILABLE

Table 4.9 lists the range of standard sizes available. These bearings are designed to fit standard UNIVERSAL BEAMS. The standard designs incorporate M20 bolts which should be adequate for most applications. The Engineer should check that these bolts can accommodate the required lift and lateral loads.

5. SPECIAL BEARINGS

Bearings having larger capacities or of different dimensions than those listed can be designed by our Technical Department.

6. INSTALLATION METHOD STATEMENT

6.1 The diagram on page 4-14 shows a Hercules Type D tank top bearing installed on a concrete water tank. Before leaving our factory, the two components are taped together to prevent damage to the low friction surfaces during transit. This tape should be removed before installation.

6.2 Cast-in bolts or chemset anchors should be installed as required by the Engineer and a 10mm thick mortar pad prepared such that the level does not vary more than 2mm from a straight edge placed in any direction across the seating

6.3 The beam flange needs to be provided with slotted holes and two 10 diameter through holes to locate the stainless steel studs. The cast-in bolts should be provided with a heavy steel washer, nut and locknut. The nuts should be pulled finger tight and then locked with the locknut.

Table 4.9 STANDARD SIZES OF HERCULUN TYPE D TANK TOP TYPE BEARINGS RANGE
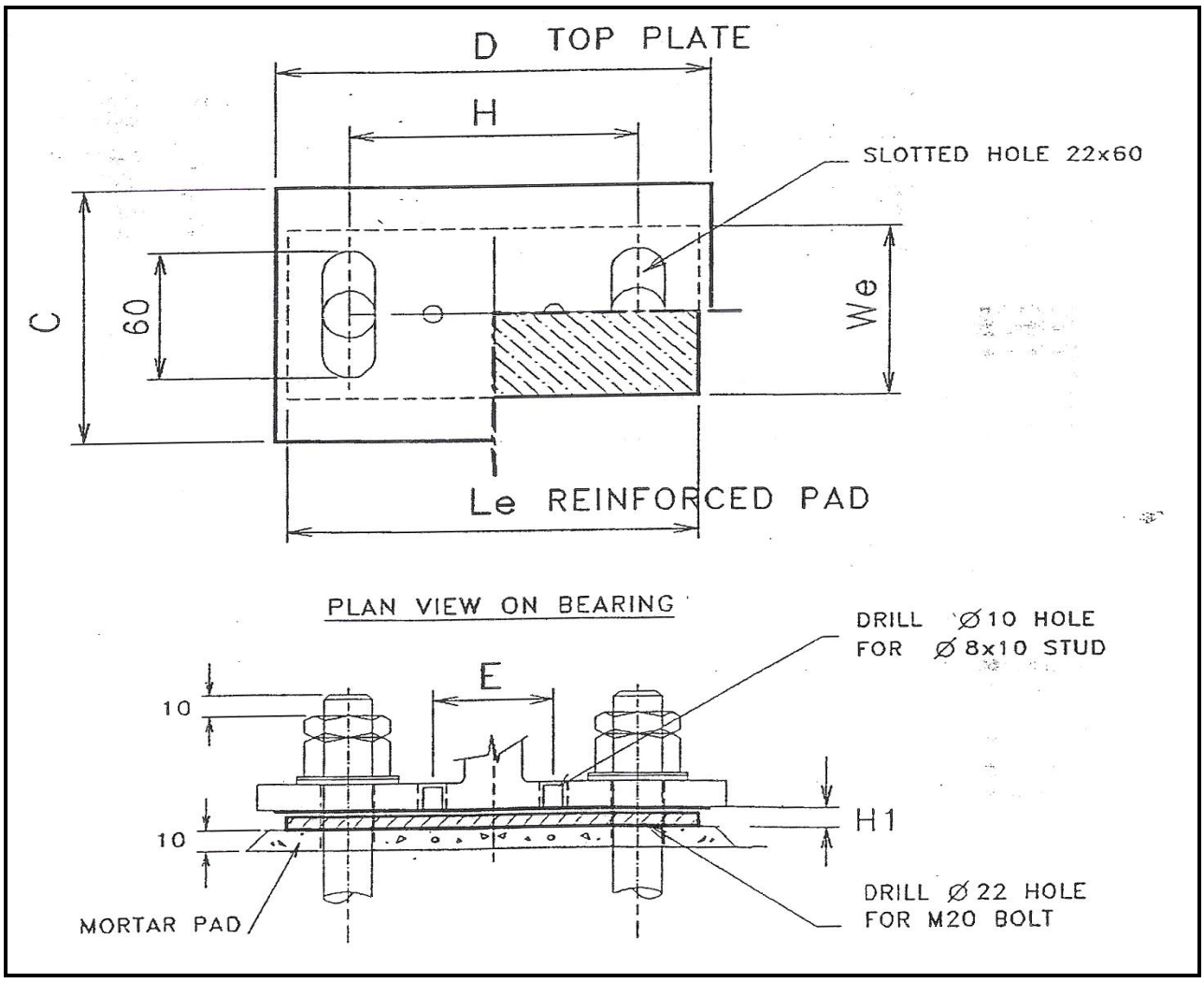
Part Number	Working Load (kN)	Universal Beam		Bearing Dimensions (mm)				
		Section	Flange Width (approx)	Top Plate (±20mm) (C×D)	Pad 0.01 rads (We× Le)	Hole Centres (H)	Stud Centres (E)	Overall Dimension (C×D×H1)
HLD/50 (TT)	50	200 UB	133	120×130	80×125	70	25	120×130×9
HLD/55 (TT)	55	250 UB	146	120×140	80×135	80	30	120×140×9
HLD/600 (TT)	60	360 UB 310 UB	171	120×160	80×150	100	40	120×160×9
HLD/65 (TT)	65	410 UB	178	120×170	80×160	110	50	120×170×9
HLD/70 (TT)	70	460 UB	190	120×180	80×170	120	50	120×180×9