# HERCULES

## MARINE FENDER

# GENERAL INTRODUCTION

With successful service record dating back to **1972**, **HERCULES** Elastomeric Energy Absorbing Devices have been widely used worldwide in today's construction industry. Although used extensively in bridge structures, **HERCULES** Energy Absorbing Devices are also specified in marine structures and other applications where **HERCULES** Fenders (HF) and vibration isolation (HVB) are required.

**HERCULES** Fenders are typically installed against the face of marine facility for the purpose of attenuating the forces inherent in arresting the motion of berthing vessels safety.

FR

# FEATURES OF HERCULES MARINE FENDER

- ✓ **H**igh Efficiency on Energy Absorption
- ✓ **E**xcellent Corrosion Resistance & Fatigue Resistance
- ✓ **S**uper Lightweight and Easy to Install & Replace
- ✓ **E**nvironmental Friendly
- ✓ **A**ttractive Appearance Design

FR

# MANUFACTURE, TOLERANCES, & QUALITY

**HERCULES** Rubber Fenders can be designed and manufactured to the dimensional tolerances using natural rubber or neoprene to the requirements of Quality Management Systems MS ISO 9001 : 2015 and the following standards:-

- BS 5400 : Part9
- AASHTO
- Australian Standards
- Eurocodes
- JIS, etc

FR

# HERCULES RUBBER CONE FENDER

- Higher Energy Absorption $E_a$ at minimum Rate Reaction Force $R_a$
- Reduced Frictional Force by attachment of PE Sliding pads
- Easy and fast installation
- Requires lesser maintenance compared with conventional type fenders

FR

# HERCULES RUBBER CONE FENDER

# HERCULES RUBBER CONE FENDER

FR

Experienced installer
by Hercules

FR

# HERCULES RUBBER CONE FENDER

- Marine Fenders are being tested according to project specifications

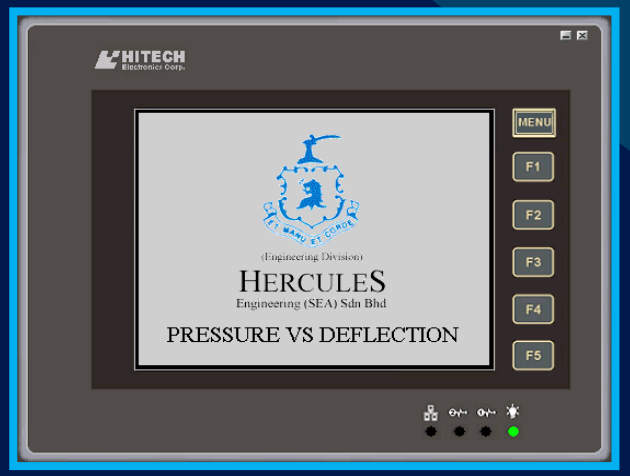

FR

# HERCULES RUBBER CONE FENDER

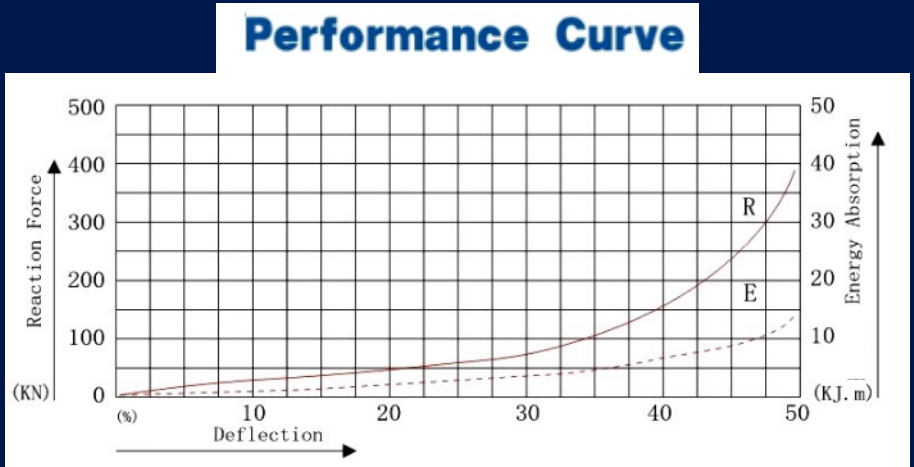


## Attachment Bolts & Cast In Anchors

| Hercules Part No. | Qty | ØQ1 | Attachment bolts | | | Wachers | | | | Socket flange | | | Cast In Anchors | | | Est'd Wt |
|---|---|---|---|---|---|---|---|---|---|---|---|---|---|---|---|---|
| | | | Lt | Lb | tb | Wx | Wy | ØQ2 | tw | ts | A | aa | Lf | Ls | Lj | (kg) |
| HCF/ 500N | 6 | M24Gr8.8 | 60 | 70 | 15 | 75 | 75 | 26 | 6 | 10 | 65 | 50 | 50 | 90 | 185 | 2.00 |
| HCF / 600N | 6 | M28Gr8.8 | 65 | 80 | 17 | 85 | 85 | 30 | 6 | 10 | 75 | 60 | 75 | 95 | 210 | 2.50 |
| HCF/ 800N | 6 | M30Gr8.8 | 70 | 90 | 19 | 85 | 85 | 32 | 6 | 10 | 80 | 65 | 85 | 110 | 230 | 3.00 |
| HCF/ 1000N | 6 | M32Gr8.8 | 80 | 105 | 23 | 100 | 100 | 34 | 6 | 10 | 85 | 70 | 100 | 125 | 255 | 4.50 |
| HCF/ 1150N | 6 | M36Gr8.8 | 80 | 105 | 23 | 100 | 100 | 38 | 6 | 10 | 85 | 70 | 100 | 125 | 255 | 4.50 |
| HCF/ 1250N | 8 | M36Gr8.8 | 80 | 105 | 23 | 100 | 100 | 38 | 6 | 10 | 85 | 70 | 100 | 125 | 255 | 5.50 |
| HCF/ 1450N | 8 | M36Gr8.8 | 80 | 105 | 23 | 100 | 100 | 38 | 6 | 10 | 85 | 70 | 100 | 125 | 255 | 5.50 |
| HCF/ 1650N | 8 | M36Gr8.8 | 80 | 105 | 23 | 100 | 100 | 38 | 6 | 10 | 85 | 70 | 100 | 125 | 255 | 5.50 |

# HERCULES RUBBER CONE FENDER

FR

## Support Chain

| Design Load | Chain Dia, Øs | Shackle Dia, Øs | Dogbone Shackle | | U-Anchor Dia, Øu |
|---|---|---|---|---|---|
| kN | (mm) | (mm) | ØQs | Length | (mm) |
| Material | SBC490 | S45, SCM435 | SBC490(S45C), SS400 | | SS400 |
| 80 | 22 | 20 | M30 | 130-220 | 32 |
| 100 | 25 | 22 | M36 | 150-250 | 36 |
| 130 | 28 | 25 | M39 | 160-270 | 40 |
| 180 | 32 | 29 | M42 | 170-300 | 42 |
| 200 | 34 | 32 | M45 | 190-320 | 46 |
| 220 | 36 | 35 | M48 | 190-340 | 48 |
| 250 | 38 | 38 | M52 | 210-360 | 55 |
| 280 | 40 | 38 | M56 | 230-390 | 55 |

# HERCULES RUBBER CONE FENDER

## – Typical Site Installation

FR

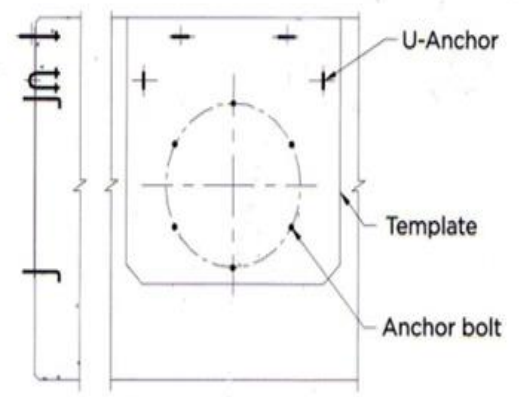


Fig 1 Cast-In anchors using a Template

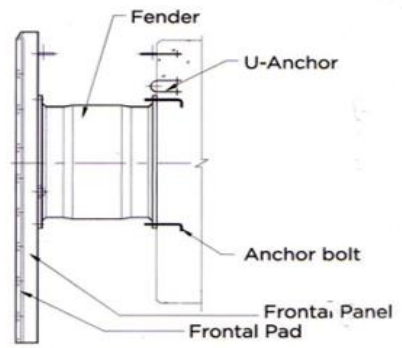


Fig 3 Install the Fender & Frontal Panel onto berthing face by fastening the fixing Bolts to Cast in Anchors

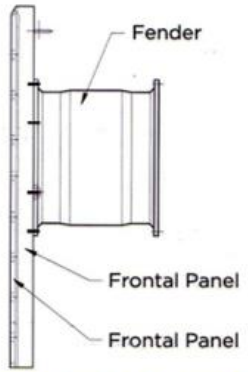


Fig 2 Mount Frontal Panel to Fender c/w Vulcanized with Mounting Plates

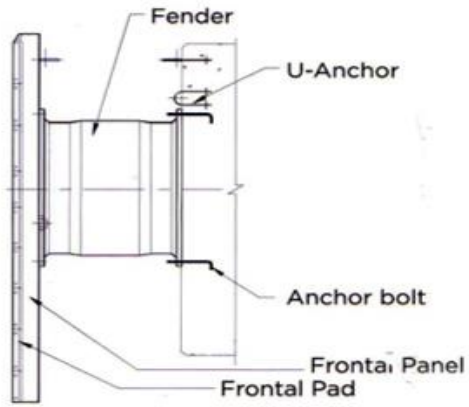


Fig 4 Install all Other Accessories

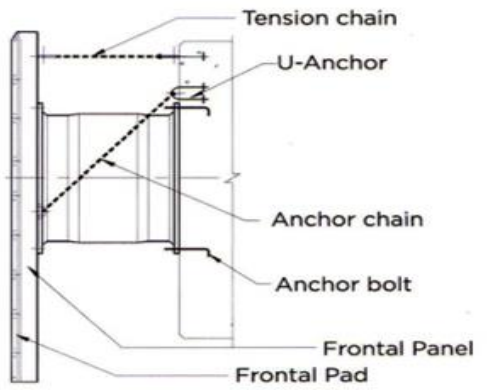


Fig 5 Inspect To Tighten All other fixing Bolts

FR

# Physical Properties of Rubber Compound

| Property | Test standard and condition | | Typical values (virgin) |
|---|---|---|---|
| Tensile Strength | BS ISO 37 | Before ageing<br>After ageing<br>70℃ x 96 hours | 16 MPa Min.<br>More than 80% to original |
| Elongation | BS ISO 37 | Before ageing<br>After ageing<br>70℃ x 96 hours | 350% Min.<br>More than 80% to original |
| Hardness | BS ISO 48 | Before ageing<br>After ageing<br>70℃ x 96 hours | 82 max.<br>Less than +8 to original |
| Ageing | BS ISO 188 | 70℃ x 96 hours | 15-20 |
| Compression set | BS ISO 815-1 | 70 x 24 hours | 30% max |
| Tear Resistance | BS ISO 34-1 | Crescent type | 70N/mm Min. |
| Abrasive Wear | BS ISO 4649 | Akron Method | 1.5cc Max. |
| Bond Strength | BS 903 A21.1 | 90 degree | 7N/mm Min. |
| Oil Resistance | BS ISO 1817 | Heavy oil<br>23℃ x 24 hours | Volume change 20% Max.<br>Volume change 60% Max. |
| Seawater Resistance | BS ISO 1817 | 3% NaCl solution<br>23℃ x 24 hours | Volume change +10%/-5% Max.<br>Hardness change ±10 max |
| Ozone Resistance | BS ISO 1431-1 | 50 pphm 20% elon.<br>40℃ x 100 hours | No Crack |
| Density | BS ISO 2781 | - | 1.10 g/cc to 1.30 g/cc |

FR

# HERCULES FOAM FENDER

- Suitable for heavy duty ship-to-ship lightering operations
- Suitable for areas with large or small tides
- Easy and fast installation

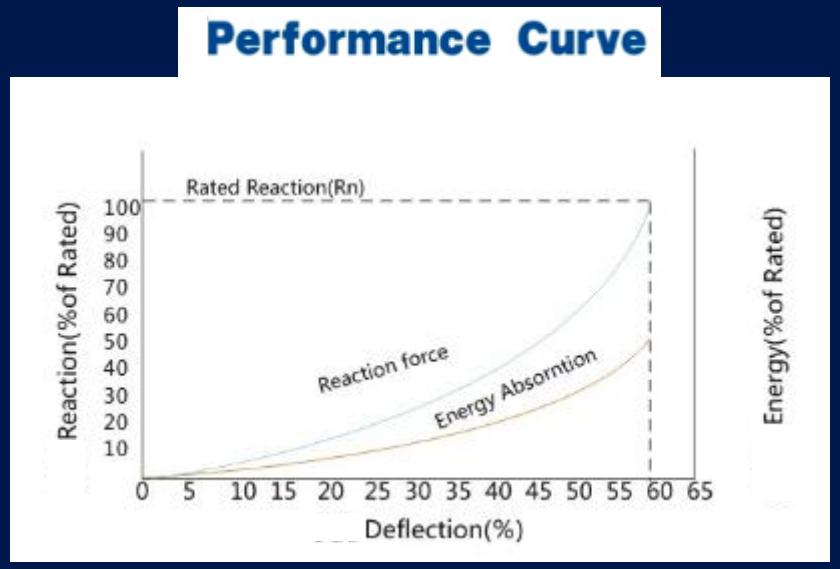

FR

# HERCULES FOAM FENDER

# HERCULES FOAM FENDER

FR

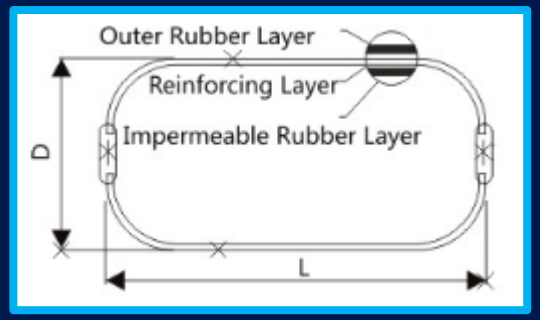


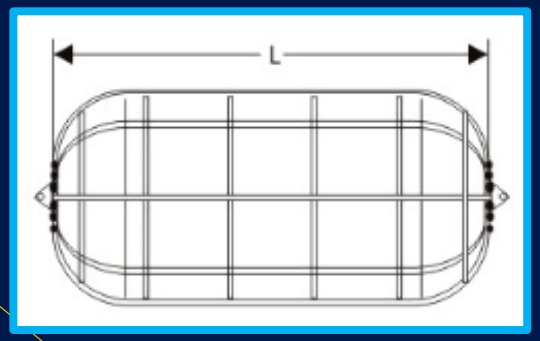


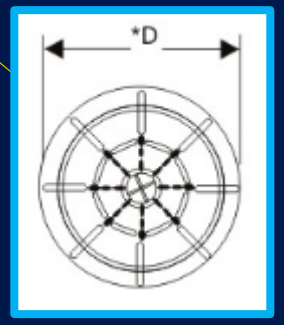


| Specification | D | L | Compression60% | | Reference weigth kg |
|---|---|---|---|---|---|
| | | | Reaction Force(KN) | Energy Absorb(KN-M) | |
| JPFΦ300X500 | 300 | 500 | 38.8 | 1.8 | 11 |
| JPFΦ400X800 | 400 | 800 | 57 | 2.6 | 30 |
| JPFΦ500X1000 | 500 | 1000 | 72 | 8.2 | 69 |
| JPFΦ600X1000 | 600 | 1000 | 87.7 | 12.2 | 100 |
| JPFΦ700X1500 | 700 | 1500 | 164 | 27.5 | 200 |
| JPFΦ1000X1500 | 1000 | 1500 | 209 | 50 | 410 |
| JPF Φ 1000X2000 | 1000 | 2000 | 274 | 65 | 552 |
| JPF Φ 1200X2000 | 1200 | 2000 | 337 | 93 | 812 |
| JPF Φ 1200X2400 | 1200 | 2400 | 390 | 110 | 953 |
| JPF Φ 1350X2500 | 1350 | 2500 | 463 | 145 | 1258 |
| JPF Φ 1500X3000 | 1500 | 3000 | 624 | 216 | 1853 |
| JPF Φ 1700X3000 | 1700 | 3000 | 696 | 273 | 2386 |
| JPF Φ 2000X3500 | 2000 | 3500 | 990 | 456 | 3843 |
| JPF Φ 2000X4000 | 2000 | 4000 | 1120 | 506 | 4593 |
| JPF Φ 2200X4500 | 2200 | 4500 | 1402 | 682 | 6000 |
| JPF Φ 2500X4000 | 2500 | 4000 | 1415 | 778 | 6866 |
| JPF Φ 2500X5000 | 2500 | 5000 | 1735 | 992 | 8558 |
| JPF Φ 3000X5000 | 3000 | 5000 | 2060 | 1422 | 12858 |
| JPF Φ 3000X6000 | 3000 | 6000 | 2470 | 1702 | 15400 |
| JPF Φ 3300X6500 | 3300 | 6500 | 2956 | 2248 | 16692 |
| JPF Φ 4300X8500 | 4300 | 8500 | 19012 | 7398 | 32000 |
| JPF Φ 4500X9000 | 4500 | 9000 | 21520 | 6732 | 38000 |

FR

# HERCULES SUPER ARCH (DA) FENDER

- Suitable for wide range of applications
- High shear resistance in longitudinal direction
- Easy and fast installation

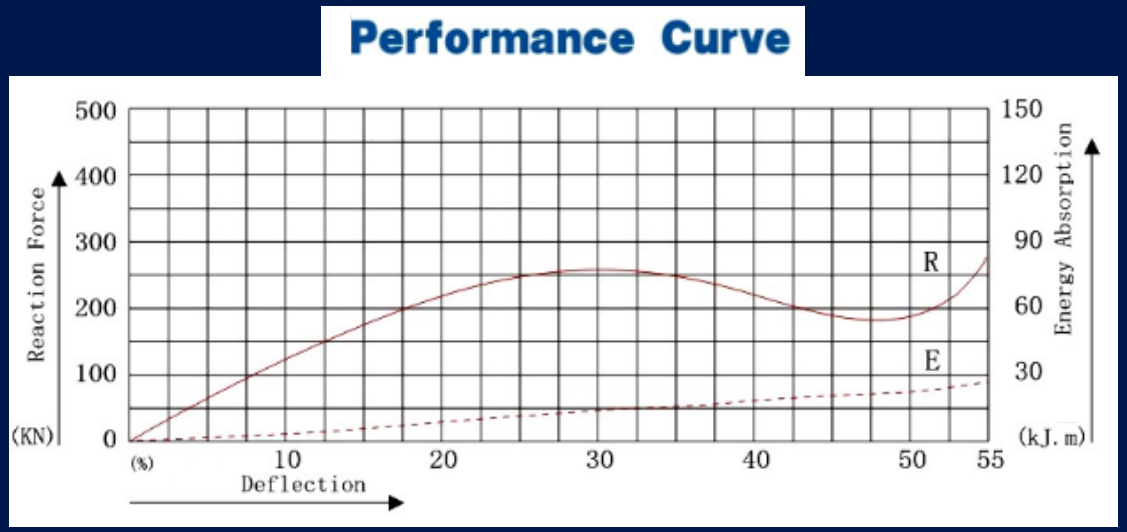

FR

# HERCULES SUPER ARCH (DA) FENDER

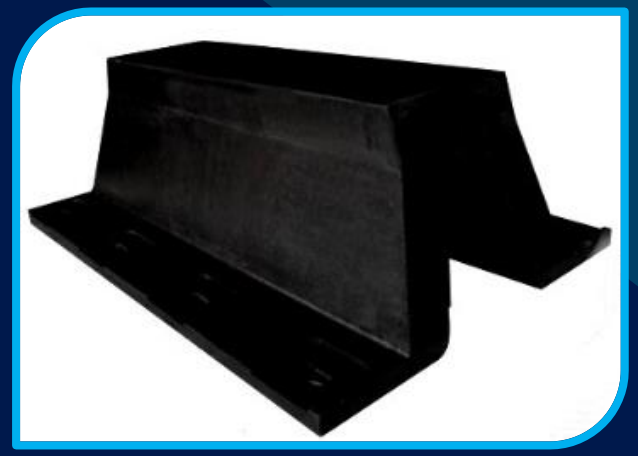

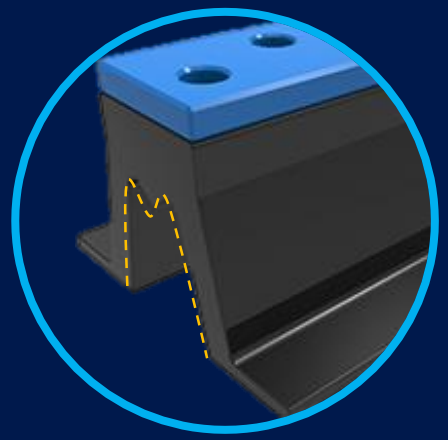

FR

# HERCULES SUPER ARCH (DA) FENDER

FR

# HERCULES SUPER ARCH (DA) FENDER

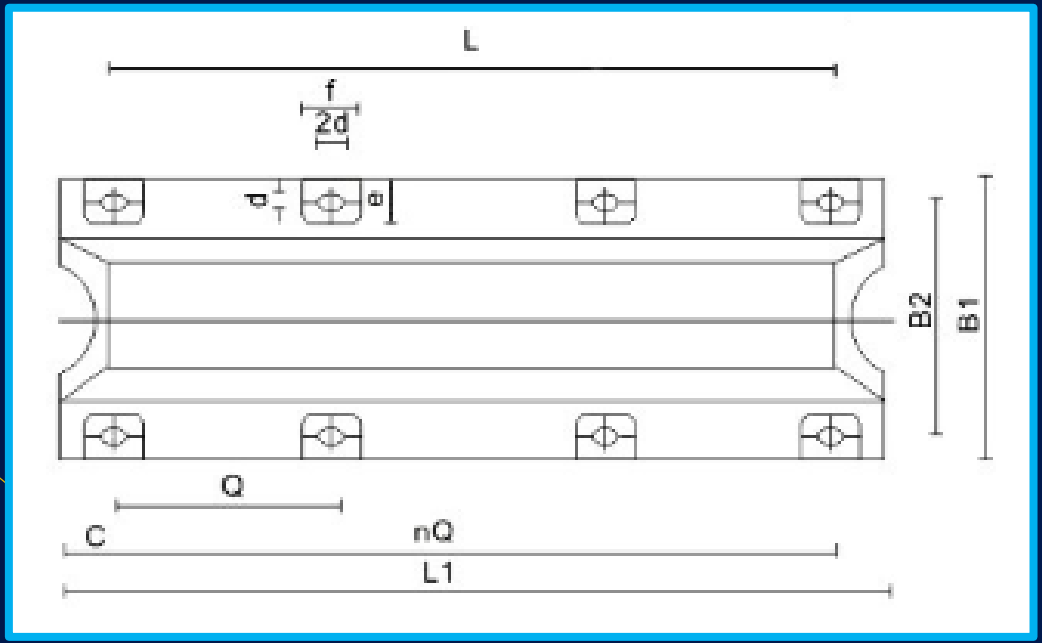


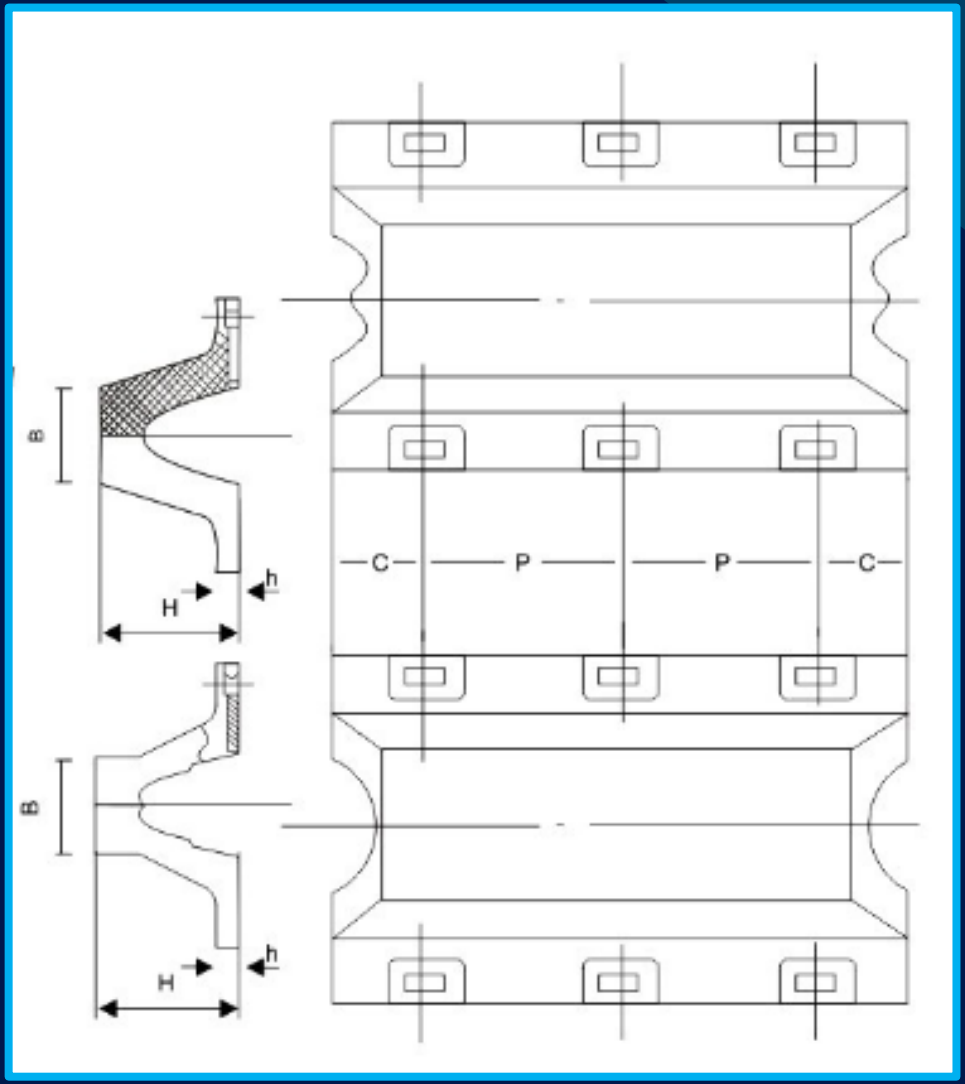

# HERCULES SUPER ARCH (DA) FENDER

FR

| Model | Specifications | | | | | | | | | | | | | |
|---|---|---|---|---|---|---|---|---|---|---|---|---|---|---|
| | H | L | L1 | B | B1 | B2 | C | d | e | f | h | p | s | n |
| DA300×1000 | 300 | 1000 | 1150 | 225 | 600 | 490 | 140 | 35 | 105 | 140 | 33 | 870 | 195 | 1 |
| DA300×1500 | 300 | 1500 | 1650 | 225 | 600 | 490 | 140 | 35 | 105 | 140 | 33 | 685 | 195 | 2 |
| DA300×2000 | 300 | 2000 | 2150 | 225 | 600 | 490 | 137.5 | 35 | 105 | 140 | 33 | 625 | 195 | 3 |
| DA300×2500 | 300 | 2500 | 2650 | 225 | 600 | 490 | 140 | 35 | 105 | 140 | 33 | 790 | 195 | 3 |
| DA300×3000 | 300 | 3000 | 3150 | 225 | 600 | 490 | 145 | 35 | 105 | 140 | 33 | 715 | 195 | 4 |
| DA300×3500 | 300 | 3500 | 3650 | 225 | 600 | 490 | 140 | 35 | 105 | 140 | 33 | 674 | 195 | 5 |
| DA400×1000 | 400 | 1000 | 1200 | 300 | 800 | 670 | 150 | 41 | 120 | 165 | 40 | 900 | 260 | 1 |
| DA400×1500 | 400 | 1500 | 1700 | 300 | 800 | 670 | 150 | 41 | 120 | 165 | 40 | 700 | 260 | 2 |
| DA400×2000 | 400 | 2000 | 2200 | 300 | 800 | 670 | 147.5 | 41 | 120 | 165 | 40 | 635 | 260 | 3 |
| DA400×2500 | 400 | 2500 | 2700 | 300 | 800 | 670 | 150 | 41 | 120 | 165 | 40 | 800 | 260 | 3 |
| DA400×3000 | 400 | 3000 | 3200 | 300 | 800 | 670 | 150 | 41 | 120 | 165 | 40 | 725 | 260 | 4 |
| DA500×1000 | 500 | 1000 | 1250 | 375 | 1000 | 840 | 160 | 47 | 140 | 180 | 45 | 930 | 325 | 1 |
| DA500×1500 | 500 | 1500 | 1750 | 375 | 1000 | 840 | 160 | 47 | 140 | 180 | 45 | 715 | 325 | 2 |
| DA500×2000 | 500 | 2000 | 2250 | 375 | 1000 | 840 | 157.5 | 47 | 140 | 180 | 45 | 645 | 325 | 4 |
| DA500×2500 | 500 | 2500 | 2750 | 375 | 1000 | 840 | 160 | 47 | 140 | 180 | 45 | 810 | 325 | 4 |
| DA500×3000 | 500 | 3000 | 3250 | 375 | 1000 | 840 | 165 | 47 | 140 | 180 | 45 | 730 | 325 | 5 |
| DA600×1000 | 600 | 1000 | 1300 | 450 | 1200 | 1010 | 170 | 50 | 160 | 195 | 54 | 960 | 390 | 1 |
| DA600×1500 | 600 | 1500 | 1800 | 450 | 1200 | 1010 | 170 | 50 | 160 | 195 | 54 | 730 | 390 | 2 |
| DA600×2000 | 600 | 2000 | 2300 | 450 | 1200 | 1010 | 167.5 | 50 | 160 | 195 | 54 | 655 | 390 | 3 |
| DA600×2500 | 600 | 2500 | 2800 | 450 | 1200 | 1010 | 170 | 50 | 160 | 195 | 54 | 820 | 390 | 4 |
| DA600×3000 | 600 | 3000 | 3300 | 450 | 1200 | 1010 | 170 | 50 | 160 | 195 | 54 | 740 | 390 | 5 |
| DA800×1000 | 800 | 1000 | 1400 | 600 | 1600 | 1340 | 180 | 68 | 180 | 270 | 72 | 1040 | 520 | 1 |
| DA800×1500 | 800 | 1500 | 1900 | 600 | 1600 | 1340 | 180 | 68 | 180 | 270 | 72 | 770 | 520 | 2 |
| DA800×2000 | 800 | 2000 | 2400 | 600 | 1600 | 1340 | 180 | 68 | 180 | 270 | 72 | 680 | 520 | 4 |
| DA800×2500 | 800 | 2500 | 2900 | 600 | 1600 | 1340 | 180 | 68 | 180 | 270 | 72 | 845 | 520 | 4 |
| DA800×3000 | 800 | 3500 | 3400 | 600 | 1600 | 1340 | 180 | 68 | 180 | 270 | 72 | 760 | 520 | 5 |

FR

# HERCULES UHMW-PE Sliding Plates

- Low friction coefficient
- UV and ozone resistant
- High abrasion resistance
- Available in different colours and bendable
- Easily replace and maintain

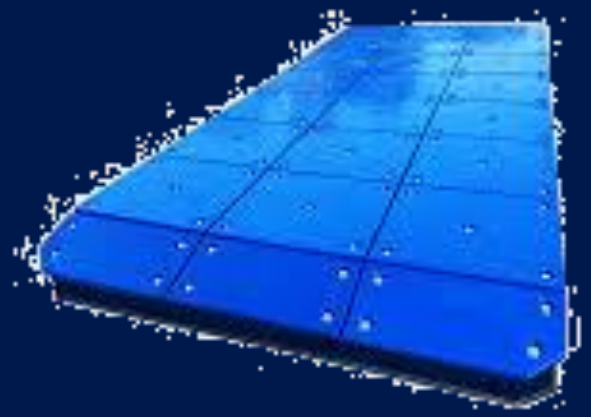

FR

# HERCULES UHMW-PE Sliding Plates

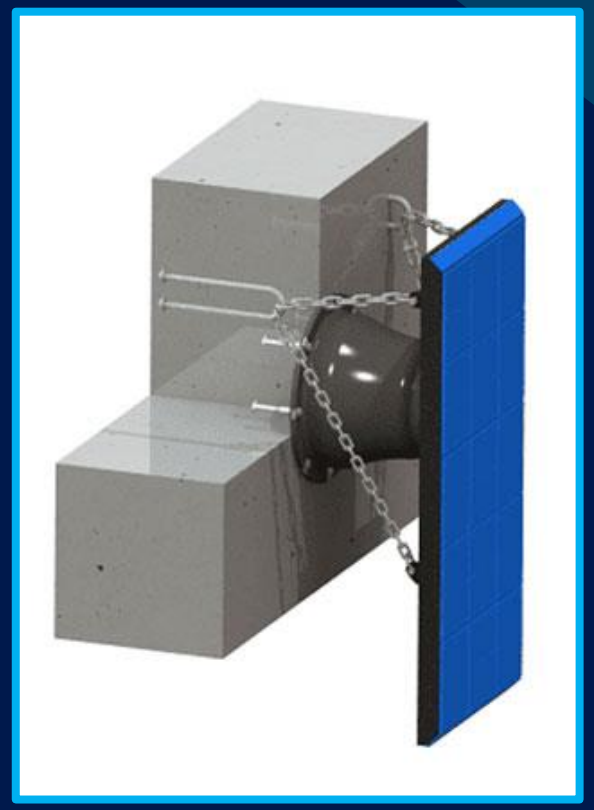

FR

# Physical Properties of UHMW-PE

| Property | Test Method | Unit | Typical values (virgin) |
|---|---|---|---|
| Density | ISO 1183-1 | $g/cm^3$ | 0.94-0.95 |
| Notched Impact Strength (Charpy) | ISO 11542-2 | $kJ/m^2$ | 140-170 |
| Abrasion Index (Sand-slurry) | ISO/DIS 15527 | 100 | 100-110 |
| Yield Strength | ISO/R 50mm/min | $N/mm^2$ | 15-20 |
| Elongation at Break | ISO/R 50mm/min | % | >50 |
| Dynamic Friction (PE-Steel) | Pm = $1N/mm^2$<br>V = 10m/min | - | 0.15 |
| Hardness | ISO 868/DIN 53505<br>3s value, 6mm sample | Shore D | 63 |
| Operating Temperature | - | ℃ | -80 to +80 |
| Thermal Expansion | DIN 53752 | $K^{-1}$ | $2 \times 10^{-4}$ |
| Molecular Weight | Viscometric | g/mol | 4,200,000 |
| Melting Point | ASTM D3418 | ℃ | 137-143 |

FR

# HERCULES FENDER STRIP

- Combination of UHMW-PE Sliding Plate and Rubber Strip
- Low friction coefficient
- UV and ozone resistant
- High abrasion resistance
- Easily replace and maintain
- Not affected by the ship’s tilting berthing

FR

# HERCULES FENDER STRIP

FR

# HERCULES FENDER STRIP

# HERCULES FENDER STRIP

FR

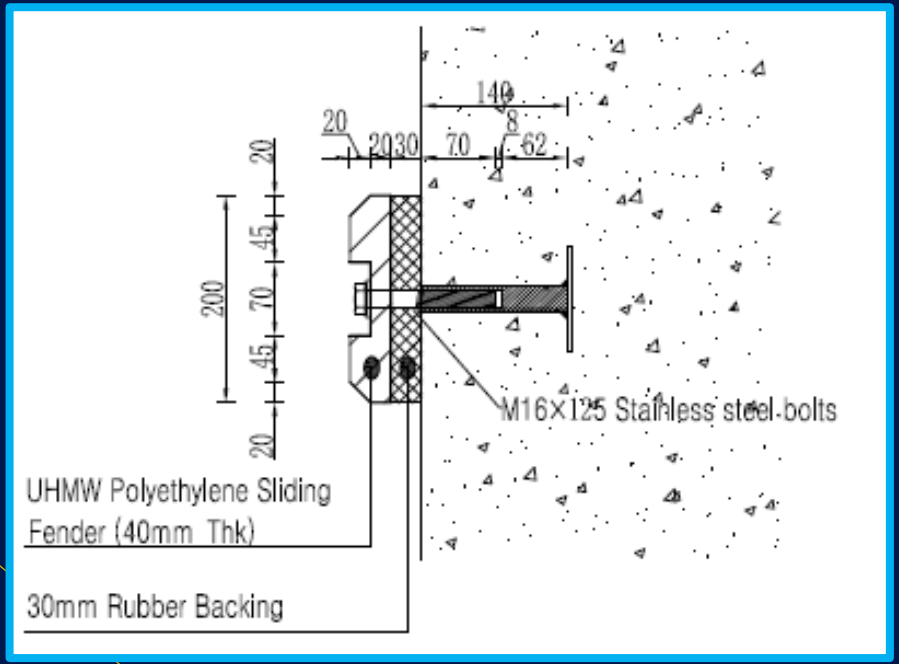


SECTION

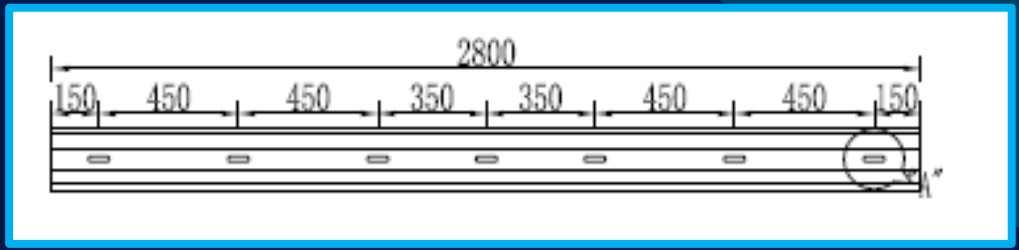


TYPICAL ELEVATION

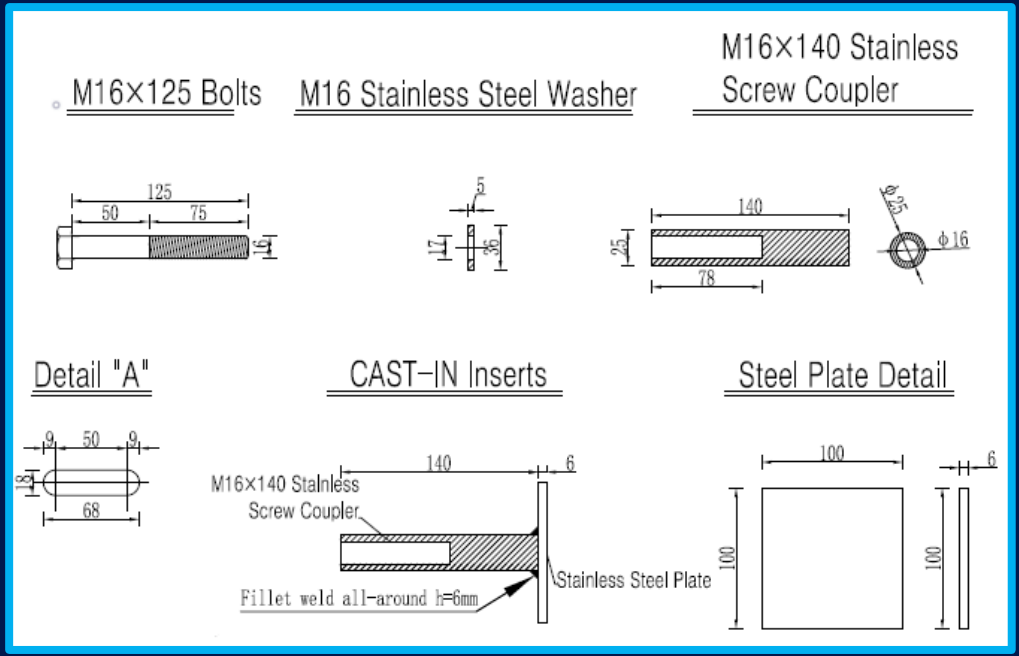


PART DETAILS

**Office: 12A, Jalan SB Jaya 1, Taman Industrial SB Jaya, 47000 Sungai Buloh, Selangor, West Malaysia.**

**•Tel : +603 6156 6388, •Fax : +603 6156 4399, •Email : info@hercules-engineering.com**